SOLUTIONS TO IIT–JEE 2005 (SCREENING)
MEMORY BASED QUESTIONS
PHYSICS

57. A particle moves in a circular path with decreasing speed. Choose the correct statement.
(a) Angular momentum remains constant
(b) Acceleration ($\vec{a}$) is towards the center
(c) Particle moves in a spiral path with decreasing radius
(d) The direction of angular momentum remains constant

Sol. (d)

58. A block of mass *m* is at rest under the action of force F against a wall as shown in figure. Which of the following statement is incorrect?
(a) f = mg [where f is the friction force]
(b) F = N [where N is the normal force]
(c) F will not produce torque about cm
(d) N will not produce torque

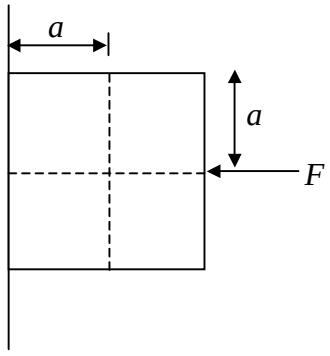

Sol. $\Sigma F_y = 0 \Rightarrow mg = f$
$\Sigma F_x = 0 \Rightarrow F = N$
Torque due to F = 0 (F passes through center)
Since the body is in equilibrium therefore $\vec{\tau}_N + \vec{\tau}_f = 0$
Since $\vec{\tau}_f \neq 0$
$\therefore \quad \vec{\tau}_N \neq 0$
$\therefore$ (d)

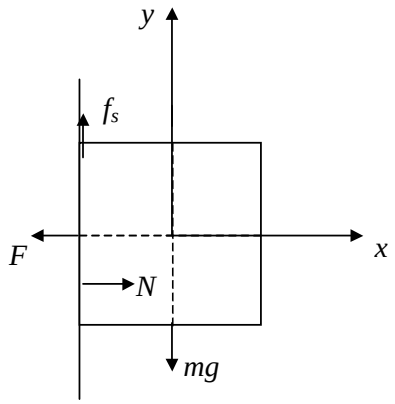

59. A simple pendulum has time period T_1. The point of suspension is now moved upward according to the relation $y = Kt^2$, ($K = 1$ m/s^2) where y is the vertical displacement. The time period now becomes T_2. The ratio of $\frac{T_1^2}{T_2^2}$ is (g = 10 m/s^2)

(a) 6/5 (b) 5/6

(c) 1 (d) 4/5

Sol. $y = Kt^2 \Rightarrow \frac{d^2y}{dt^2} = 2K$

$\Rightarrow a_y = 2$ m/s^2

$$T_1 = 2\pi\sqrt{\frac{L}{g}}, \quad T_2 = 2\pi\sqrt{\frac{L}{g + a_y}}$$

Dividing,

$$\frac{T_1}{T_2} = \sqrt{\frac{g + a_y}{g}} = \sqrt{\frac{6}{5}}$$

Squaring,

$$\frac{T_1^2}{T_2^2} = \frac{6}{5}$$

$\therefore$ (a)

60. From a circular disc of radius R and mass 9M, a small disc of radius R/3 is removed from the disc. The moment of inertia of the remaining disc about an axis perpendicular to the plane of the disc and passing through O is

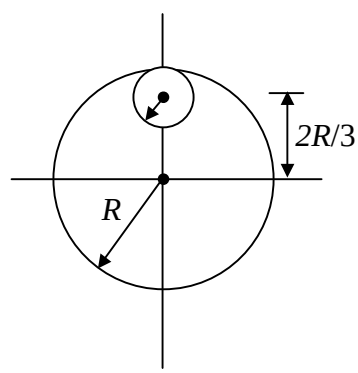

(a) $4MR^2$ (b) $\frac{40}{9}MR^2$

(c) $10MR^2$ (d) $\frac{37}{9}MR^2$

Sol. Mass of smaller circle = M

$$I = \frac{9MR^2}{2} - \left(\frac{1}{2}M\left(\frac{R}{3}\right)^2 + \frac{1}{2}M\left(\frac{2R}{3}\right)^2\right)$$

$$= 4MR^2$$

$\therefore$ (a)

61. Which of the following set have different dimensions?

(a) Pressure, Young's modulus , Stress

(b) Emf, Potential difference, Electric potential

(c) Heat, Work done, Energy

(d) Dipole moment, Electric flux, Electric field

Sol. **(d)**

62. The given graph shows the variation of velocity with displacement. Which one of the graph given below correctly represents the variation of acceleration with displacement ?

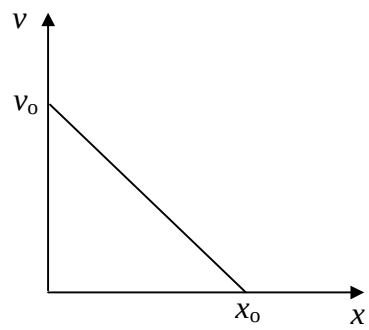

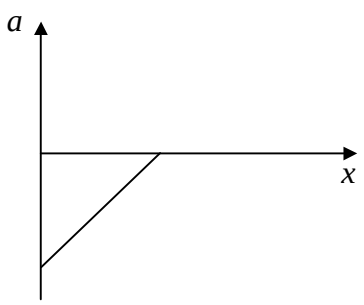

(a)

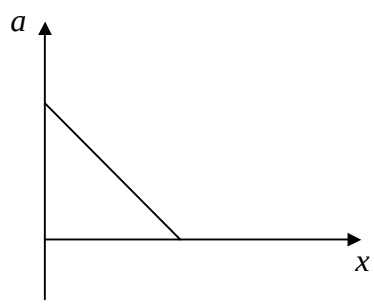

(b)

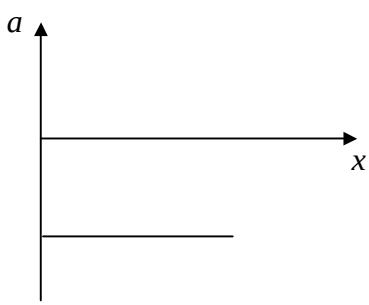

(c)

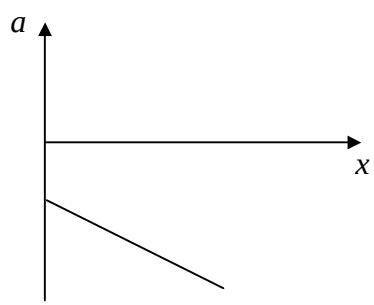

(d)

Sol. $v = -mx + v_o$ (where $m = \frac{v_o}{x_o}$) (1)

$\frac{dv}{dt} = -m\frac{dx}{dt}$ $\Rightarrow$ $a = m^2 x - mv_o$ [substituting the value of v from (1)]

$\therefore$ (a)

63. Three infinitely long charge sheets are placed as shown in figure. The electric field at point P is

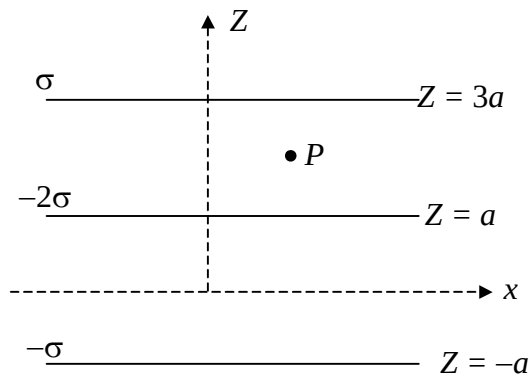

(a) $\frac{2\sigma}{\varepsilon_o}\hat{k}$ (b) $-\frac{2\sigma}{\varepsilon_o}\hat{k}$

(c) $\frac{4\sigma}{\varepsilon_o}\hat{k}$ (d) $-\frac{4\sigma}{\varepsilon_o}\hat{k}$

Sol. $$\vec{E} = -\frac{\sigma}{2\varepsilon_o}\hat{k} - \frac{2\sigma}{2\varepsilon_o}\hat{k} - \frac{\sigma}{2\varepsilon_o}\hat{k} = -\frac{2\sigma}{\varepsilon_o}\hat{k}$$

$\therefore$ (b)

64. A photon collides with a stationary hydrogen atom in ground state inelastically. Energy of the colliding photon is 10.2 eV. After a time interval of the order of micro second another photon collides with same hydrogen atom inelastically with an energy of 15 eV. What will be observed by the detector?

(a) 2 photon of energy 10.2 eV
(b) 2 photon of energy of 1.4 eV
(c) One photon of energy 10.2 eV and an electron of energy 1.4 eV
(d) One photon of energy 10.2 eV and another photon of 1.4 eV

Sol. Due to 10.2 eV photon one photon of energy 10.2 eV will be detected.
Due to 15 eV photon the electron will come out of the atom with energy
(15 - 13.6) = 1.4 eV.

$\therefore$ (c)

65. A moving coil galvanometer of resistance 100 Ω is used as an ammeter using a resistance 0.1 Ω. The maximum deflection current in the galvanometer is 100 μA. Find the minimum current in the circuit so that the ammeter shows maximum deflection

(a) 100.1 mA (b) 1000.1 mA
(c) 10.01 mA (d) 1.01 mA

Sol. $$I_G \times G = (I - I_G)S$$

$\Rightarrow$ I = $\left(1+\frac{G}{S}\right)I_G$ $\Rightarrow$ I = 100.1 mA

$\therefore$ (a)

66. The pressure of a medium is changed from 1.01×10^5 Pa to 1.165×10^5 Pa and change in volume is 10% keeping temperature constant. The Bulk modulus of the medium is

(a) 204.8×10^5 Pa (b) 102.4×10^5 Pa
(c) 51.2×10^5 Pa (d) 1.55×10^5 Pa

Sol. $$B = \frac{\Delta P}{\Delta V / V} = \frac{(1.165 - 1.01) \times 10^5}{10/100} = 1.55 \times 10^5 \text{ Pa}$$

$\therefore$ (d)

67. An open pipe is in resonance in 2nd harmonic with frequency f_1. Now one end of the tube is closed and frequency is increased to f_2 such that the resonance again occurs in *n*th harmonic. Choose the correct option.

(a) n = 3, $f_2 = \frac{3}{4} f_1$ (b) n = 3, $f_2 = \frac{5}{4} f_1$
(c) n = 5, $f_2 = \frac{5}{4} f_1$ (d) n = 5, $f_2 = \frac{3}{4} f_1$

Sol. Open pipe resonance $f_1 = \frac{2v}{2L}$

Closed pipe resonance $f_2 = \frac{nv}{4L}$

$f_2 = \frac{n}{4} f_1$ (where *n* is odd and $f_2 > f_1$)

$\therefore$ n = 5

$\therefore$ (c)

68. Water of volume 2 litre in a container is heated with a coil of 1 kW at 27 ^oC. The lid of the container is open and energy dissipates at rate of 160 J/s. In how much time temperature will rise from 27^oC to 77^oC [Given specific heat of water is 4.2 kJ/kg]

(a) 8 min 20 s (b) 6 min 2 s
(c) 7 min (d) 14 min

Sol. Heat gained by water = Heat supplied by container - heat lost

$mS\Delta\theta = 1000t - 160t$

$$t = \frac{2 \times 4.2 \times 1000 \times 50}{840} = 8 \text{ min } 20 \text{ s}$$

$\therefore$ (a)

69. Water is filled in a cylindrical container to a height of 3m. The ratio of the cross-sectional area of the orifice and the beaker is 0.1. The square of the speed of the liquid coming out from the orifice is ($g = 10\ m/s^2$)

(a) $50\ m^2/s^2$ (b) $50.5\ m^2/s^2$

(c) $51\ m^2/s^2$ (d) $52\ m^2/s^2$

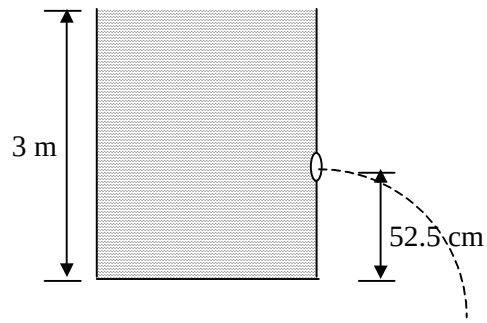

Sol.

$$v^2 = \frac{2gh}{\left(1-\frac{a^2}{A^2}\right)} = \frac{2\times 10\times 2.475}{1-0.01} = 50\ m^2/s^2$$

$\therefore$ (a)

70. In Young's double slit experiment intensity at a point is (1/4) of the maximum intensity. Angular position of this point is

(a) $\sin^{-1}(\lambda/d)$ (b) $\sin^{-1}(\lambda/2d)$

(c) $\sin^{-1}(\lambda/3d)$ (d) $\sin^{-1}(\lambda/4d)$

Sol. $I_o = 4I_o \cos^2(\phi/2) \quad \Rightarrow \quad \phi = 2\pi/3$

$\Rightarrow \quad \Delta p \times (2\pi/\lambda) = 2\pi/3$

$\Rightarrow \quad \Delta p = \lambda/3$

$\sin\theta = \Delta p/d$

$\Rightarrow \quad \sin\theta = \lambda/3d$

$\therefore$ (c)

71. In which of the following process, convection does not take place primarily

(a) sea and land breeze

(b) boiling of water

(c) warming of glass of bulb due to filament

(d) heating air around a furnace

Sol. Warming of glass of bulb due to filament is caused by radiation.

$\therefore$ (c)

72. A container is filled with water (μ = 1.33) upto a height of 33.25 cm. A concave mirror is placed 15 cm above the water level and the image of an object first refraction from surface of water & then reflection from mirror placed at the bottom is formed 25 cm below the water level. The focal length of the mirror is

(a) 10 (b) 15

(c) 20 (d) 25

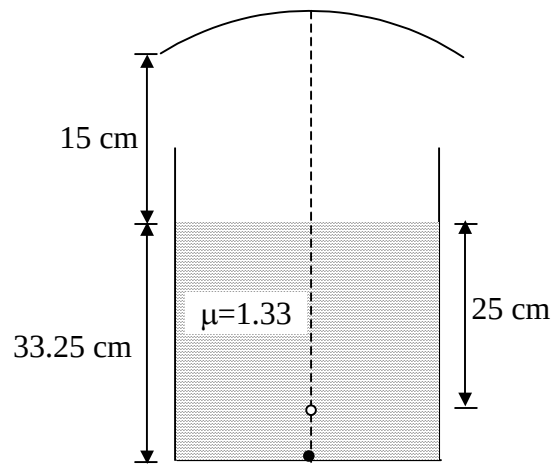

Sol. Distance of object from mirror = 15 + $\frac{33.25}{4}\times 3$ = 39.93 cm

Distance of image from mirror = 15 + $\frac{25}{4}\times 3$ = 34.75

For mirror, $\frac{1}{v}+\frac{1}{u}=\frac{1}{f}$

$\Rightarrow$ $\frac{1}{-33.75}-\frac{1}{39.93}=\frac{1}{f}$

$\Rightarrow$ $f \approx 18.3$ cm

The most suitable answer is (c)

73. Variation of radiant energy emitted by sun, filament of tungsten lamp and welding arc as a function of its wavelength is shown in figure. Which of the following option is the correct match?

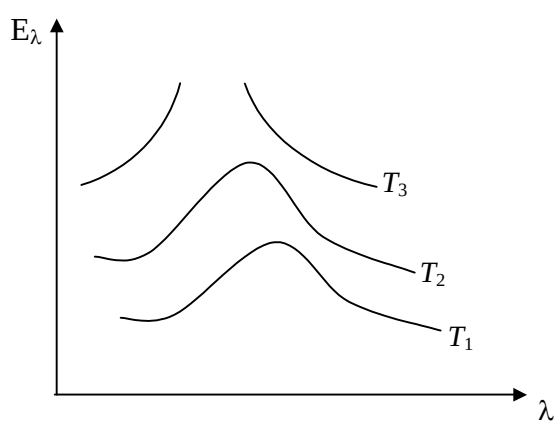

(a) Sun-T_1, tungsten filament - T_2, welding arc - T_3

(b) Sun-T_2, tungsten filament - T_1, welding arc - T_3

(c) Sun-T_3, tungsten filament - T_2, welding arc - T_1

(d) Sun-T_1, tungsten filament - T_3, welding arc - T_2

Sol. $\lambda_m.T$ = K (constant) $\Rightarrow$ $T_3 > T_2 > T_1$

$\therefore$ (c)

74. Calorie is defined as the amount of heat required to raise temperature of 1 g of water by 1^oC and it is defined under which of the following conditions?

(a) From 14.5 ^oC to 15.5 ^oC at 760 mm of Hg
(b) From 98.5 ^oC to 99.5 ^oC at 760 mm of Hg
(c) From 13.5 ^oC to 14.5 ^oC at 76 mm of Hg
(d) From 3.5 ^oC to 4.5oC at 76 mm of Hg

Sol. (a)

75. A convex lens is in contact with concave lens. The magnitude of the ratio of their focal length is 2/3. Their equivalent focal length is 30 cm. What are their individual focal lengths?

(a) -75, 50 (b) -10, 15
(c) 75, 50 (d) -15, 10

Sol.

$$\frac{f_1}{f_2} = \frac{2}{3} \quad (1)$$

$$\frac{1}{f_1} - \frac{1}{f_2} = \frac{1}{30} \quad (2)$$

Solving equations (1) and (2),

$\Rightarrow$ $f_2 = 15$ cm (concave lens)
f_1 = 10 cm (convex lens)
$\therefore$ (d)

76. K_α wavelength emitted by an atom λ is given by an atom of atomic number Z = 11 is λ. Find the atomic number for an atom that emits K_α radiation with wavelength 4λ.

(a) Z = 6 (b) Z = 4
(c) Z = 11 (d) Z = 44

Sol.

$$\sqrt{f_1} = \sqrt{\frac{v}{\lambda_1}} = a(11-1)$$

$$\sqrt{f_2} = \sqrt{\frac{v}{\lambda_2}} = a(Z-1)$$

By dividing,

$$\sqrt{\frac{\lambda_2}{\lambda_1}} = \frac{10}{Z-1}$$

$$\Rightarrow \quad \sqrt{\frac{1}{4}} = \frac{10}{Z-1}$$

$\Rightarrow$ Z = 6
$\therefore$ (a)

77. A rigid container with thermally insulated walls contains a coil of resistance 100 Ω, carrying current 1 A. Change in internal energy after 5 minute will be

(a) 0 kJ (b) 10 kJ
(c) 20 kJ (d) 30 kJ

Sol. Given process is isochoric since volume is constant.

$\Delta U = \Delta Q = I^2Rt = (1)^2 \times 100 \times 5 \times 60 = 30$ kJ

$\therefore$ (d)

78. A beam of electron is used in an YDSE experiment. The slit width is d. When the velocity of electron is increased, then

(a) no interference is observed
(b) fringe width increases
(c) fringe width decreases
(d) fringe width remains same

Sol. Momentum of the electron will increase. So the wavelength (λ = h/p)of electrons will decrease and fringe width decreases as $\beta \propto \lambda$

$\therefore$ (b)

79. A tuning fork of 512 Hz is used to produce resonance in a resonance tube experiment. The level of water at first resonance is 30.7 cm and at second resonance is 63.2 cm. The error in calculating velocity of sound is

(a) 204.1 cm/s (b) 110 cm/s
(c) 58 cm/s (d) 80 cm/s

Sol. The question is incomplete as velocity of sound is not given.

80. Find out the value of current through 2Ω resistance for the given circuit.

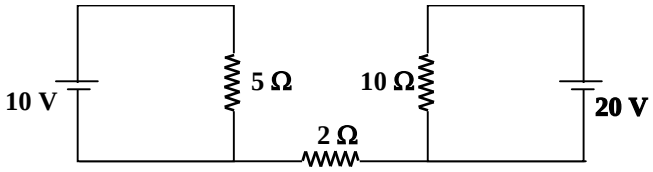

(a) 5 A
(b) 2 A
(c) zero
(d) 4 A

Sol. **Since the current coming out from the positive terminal is equal to the current entering the negative terminal, therefore, current in the respective loop will remain confined in the loop itself.**

$\therefore$ **Current through 2 Ω resistor = 0**

$\therefore$ **(c)**

81. **A 4 μF capacitor, a resistance of 2.5 MΩ is in series with 12 V battery. Find the time after which the potential difference across the capacitor is 3 times the potential difference across the resistor. [Given ln(2) = 0.693]**

(a) 13.86 s (b) 6.93 s
(c) 7 s (d) 14 s

Sol. $V_R = \frac{E}{4} = Ee^{-\frac{t}{RC}}$

$\Rightarrow \frac{1}{4} = e^{-\frac{t}{10}}$ (RC = $2.5 \times 10^6 \times 4 \times 10^{-6} = 10$)

$\Rightarrow$ t = 13.86 s

$\therefore$ (a)

82. An infinitely long cylinder is kept parallel to an uniform magnetic field B directed along positive z axis. The direction of induced current as seen from the z axis will be

(a) Clockwise of the +ve z axis (b) anticlockwise of the +ve z axis
(c) zero (d) along the magnetic field

Sol. Since the magnetic field is uniform therefore there will be no change in flux hence no current will be induced.

$\therefore$ (c)

83. If a star can convert all the He nuclei completely into oxygen nuclei. The energy released per oxygen nuclei is
[Mass of He nucleus is 4.0026 amu and mass of Oxygen nucleus is 15.9994 amu]

(a) 7.6 MeV (b) 56.12 MeV
(c) 10.24 MeV (d) 23.9 MeV

Sol. Mass defect = $4 \times 4.0026 - 15.9994 = 0.011$
Energy released by oxygen nuclei = $0.011 \times 931 = 10.24$ MeV

$\therefore$ (c)

84. A body with area A and temperature T and emissivity e = 0.6 is kept inside a spherical black body. What will be the maximum energy radiated ?

(a) $0.60\ eAT^4$ (b) $0.80\ eAT^4$
(c) $1.00\ eAT^4$ (d) $0.40\ eAT^4$

Sol. The question is not clear.